Figure 1. Integrated PCI Core Block Diagram

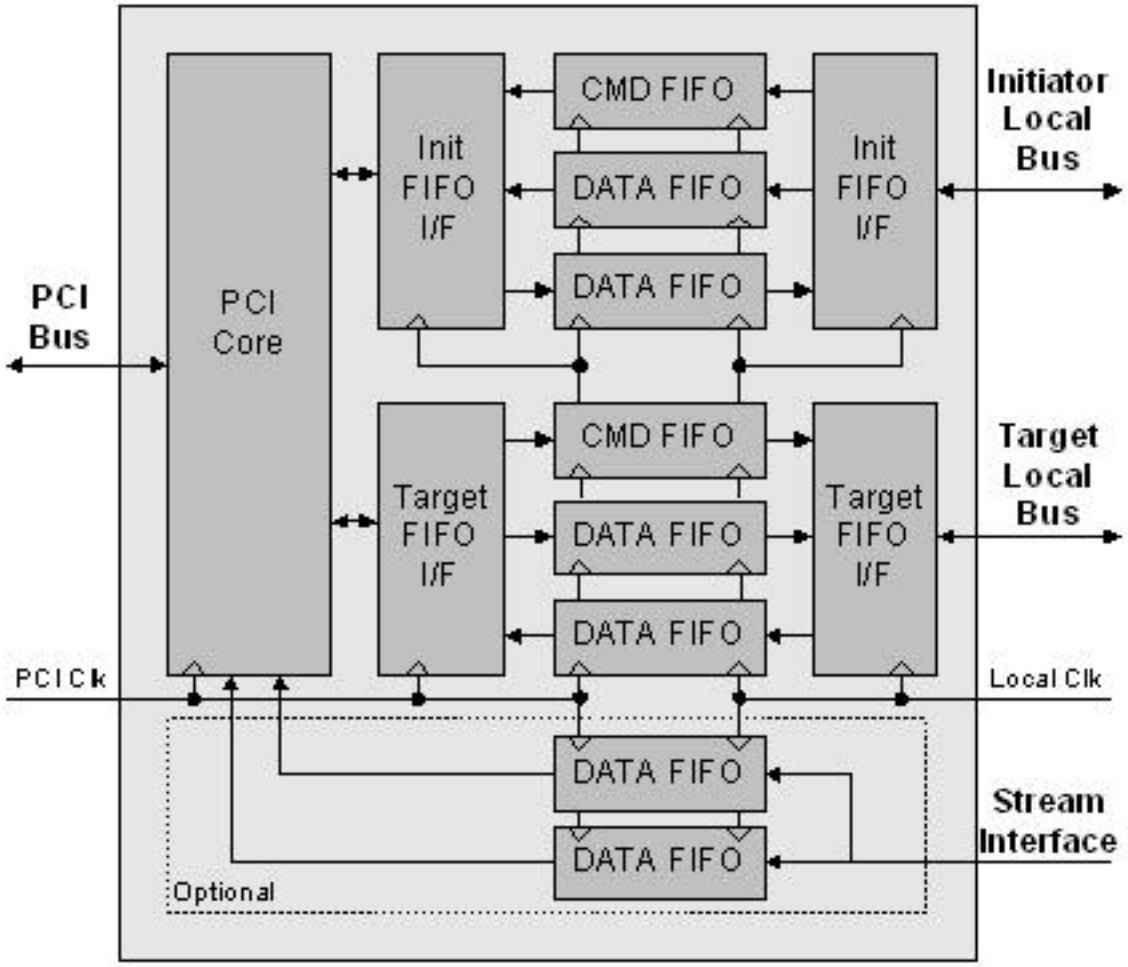

Copyright 2006 Northwest Logic, 1100 NW Compton Drive, Suite 100, Beaverton, OR 97006. The preceeding .pdf graphic was prepared and issued by Northwest Logic. It is being provided by Altera Corporation solely as an accomodation, and Altera makes no representations, warranties or guaranties, implied or express, as to the document or its contents, including as to the accuracy, completeness or genuineness thereof. Please contact Northwest Logic, 1100 NW Compton Drive, Suite 100, Beaverton, OR 97006 for complete, current version thereof or for further information.